LEDWIDE LIGHTING CO.,LTD





LW-P60 HOT

Up/Down

ACCESSORIES :

	Aluminium Endcap (without hole) Code: P60-Cap		Suspension Kits Code: Sus.KitsB
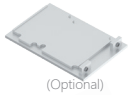 (Optional)	CNC Aluminum Cap (without hole) Code: P60-Cap-N	 (Optional)	Wall Clips Code: WClip
 (Optional)	Joiners 180°A Code: J-180A	 (Optional)	 (Optional)	Joiners 120°A/B Code: J-120A/B
 (Optional)	Dali & Push Dimmable LED Driver 30/36/60/100W Code:LW-SCD		 (Optional)	Joiners 90°A Code: J-90A
 (Optional)	Standard IP67 Led Powersupply 20/30/36/45/60W Code: LW-HLD		 (Optional)	Joiners 90°B Code: J-90B

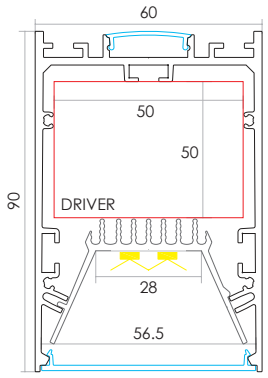

Optional Diffuser(PMMA)

P60					
Dimensions(mm)	Max strip width	Opal	New opal	Frosted	Clear
60*90	20mm	/	√	/	/
Code		/	P60-N	/	/
Light Transmittance		/	74%	/	/

P60					
Dimensions(mm)	Max strip width	Opal	New opal	Frosted	Clear
60*90	28mm	√	/	/	/
Code		P60-O	/	/	/
Light Transmittance		69%	/	/	/

<57.6W/m

Aluminum Profile Weight:2.2kg/m

Stocked length availability:2m,2.5m.
Customized length below 6m upon your request.

Tel: 0086 755 29362351 Direct: 0086 0 18680360436 Fax: 86 755 29014058 E-mail: info@ledwide.com www.ledwide.com
Address:1-2/F, Building A2,Sinopol Ind.Park, First Industrial Zone, BaiHua communities, Guangming New District, Shenzhen, P.R. China Postcode: 518107

Installing Instructions

Wall Mounted

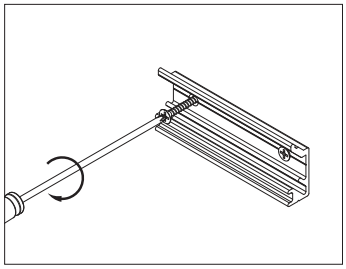

1. Attach the wall side clip to surface

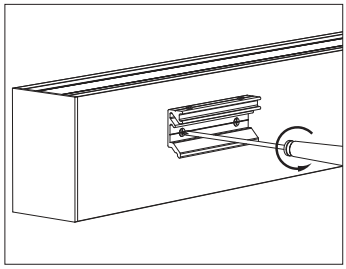

2. Attach the other side of clip to light fixture

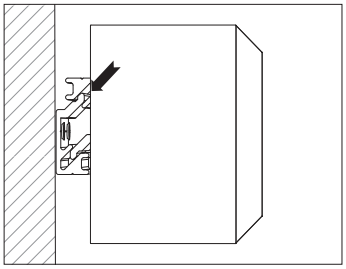

3. Mount the light fixture onto the wall attachment

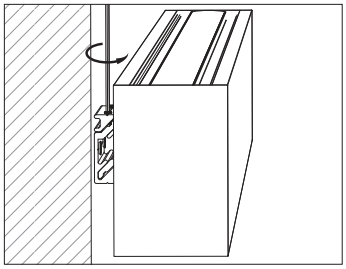

4. Secure the clips to ensure it stays in place

Applicable joiners

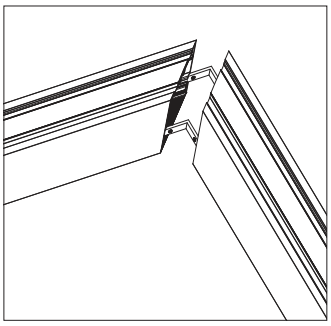

90°B

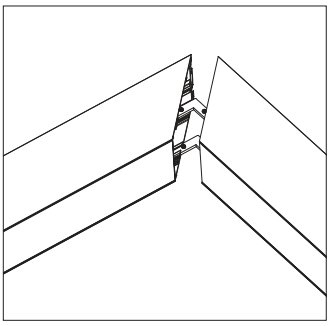

90°A

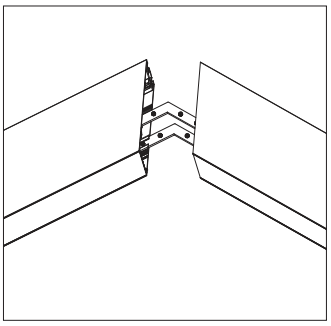

120°

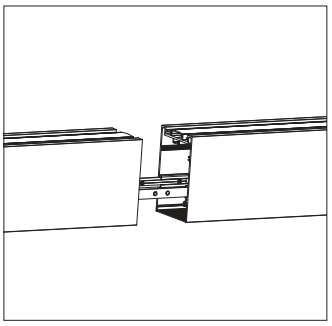

180°A

Installation & Joint Options

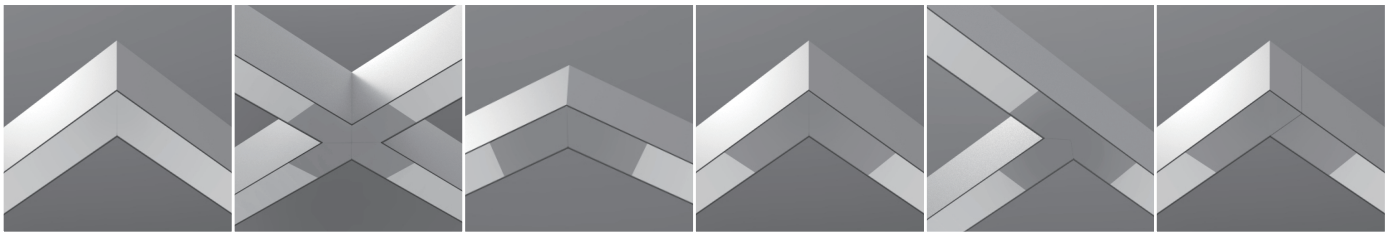

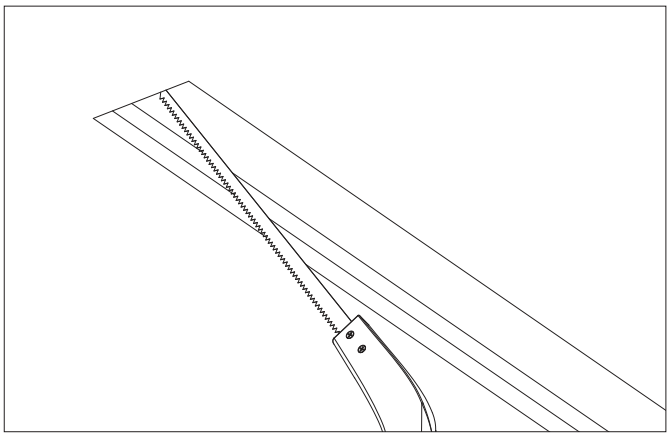

1. Prepare cut-out hole in ceiling

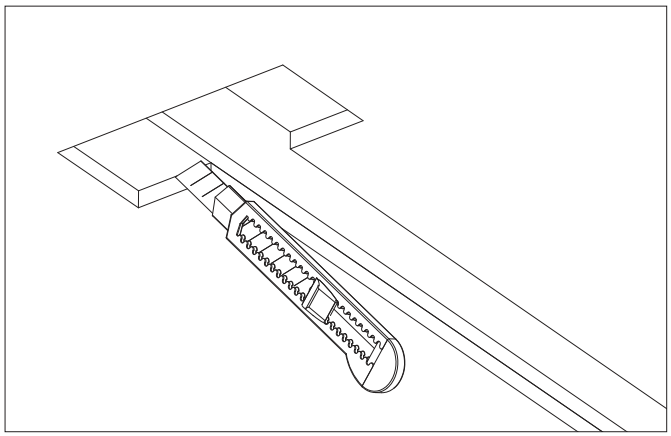

2. Recess a small part of the ceiling plaster board to fit the L bracket

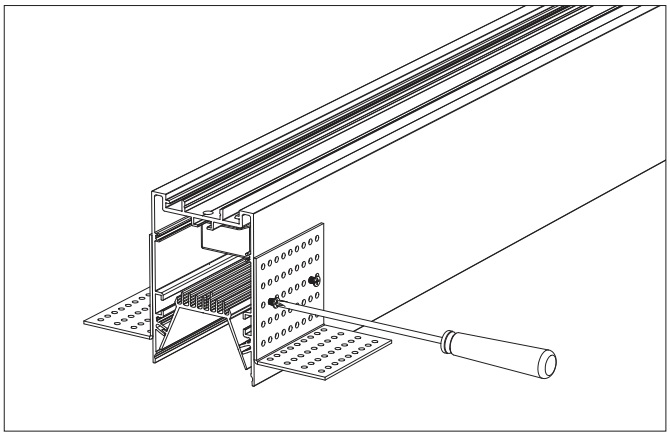

3. Screw on the perforated L brackets to the profile

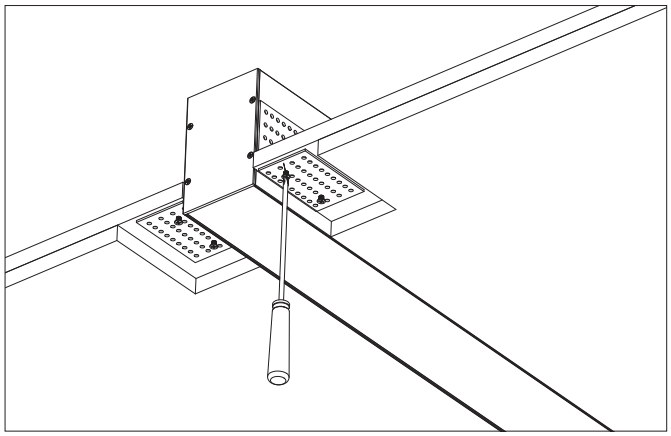

4. Place the profile into the cut-out hole with the L brackets fitting into the small recess made area. Secure L brackets accordingly.

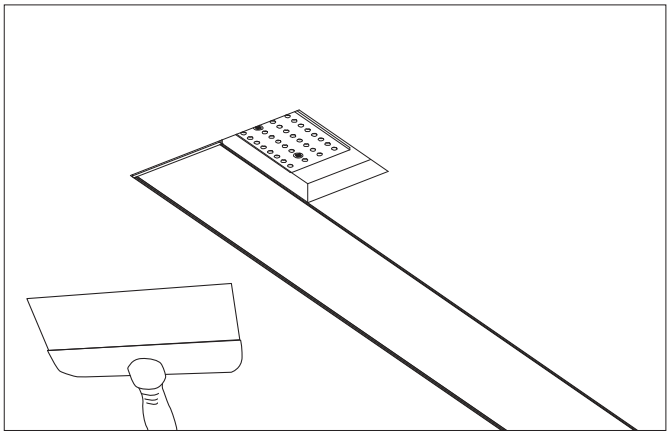

5. Re-plaster the recess area so it becomes level with the plaster board surface

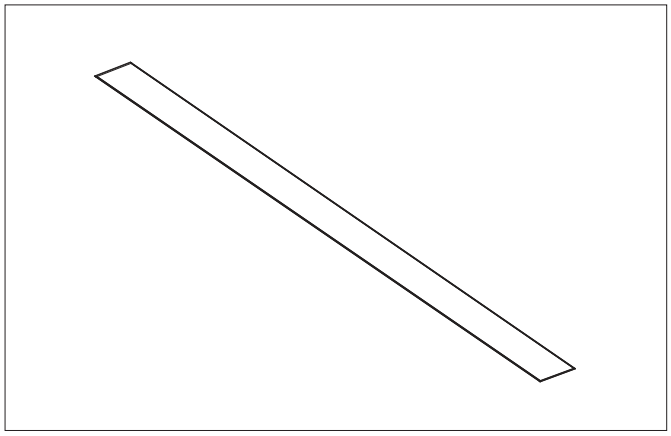

6. Once install is completed, profile should appear trimless on ceiling surface

Installing Instructions

Suspended

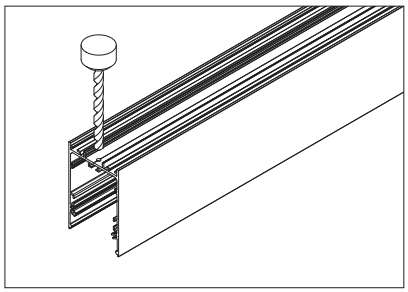

1. Drill a hole on the aluminium base

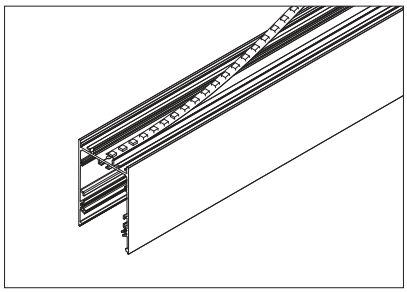

2. Apply the LED strips on to base

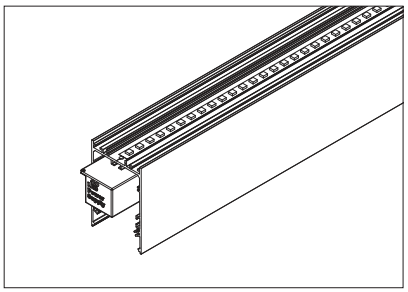

3. Secure LED driver on underside of profile cavity

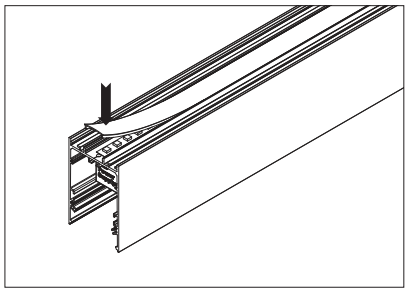

4. Attach smaller diffuser into place, working from end to end

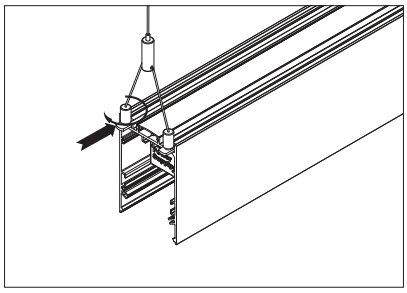

5. Slide the suspension base into the profile groove

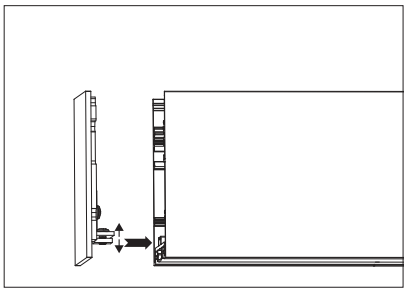

6. Align the screwless end cap into place

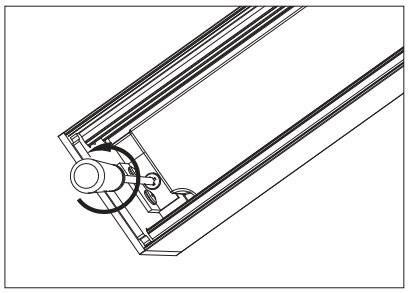

7. Secure the end cap at the L bracket base with screws

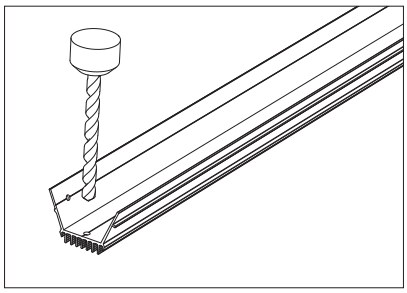

8. Drill a hole on the reflector for cable feed from LED strip

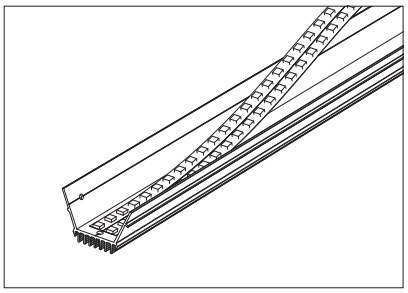

6. Affix the LED strip onto the reflector

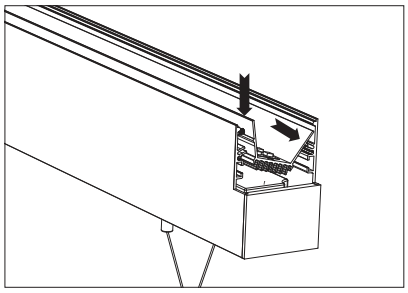

10. Ease the reflector into the profile cavity

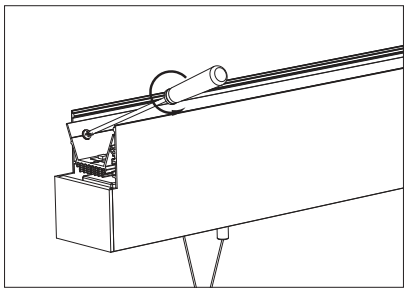

11. Secure the reflector with screws

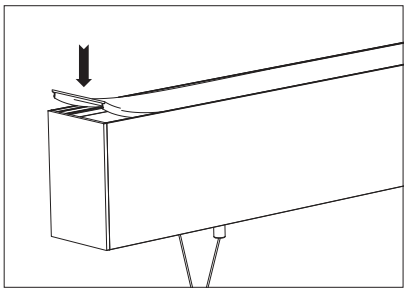

12. Attach diffuser into place, working from end to end

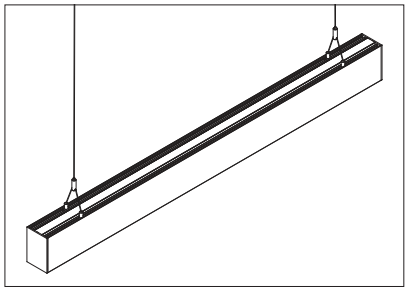

13. Installation completed.

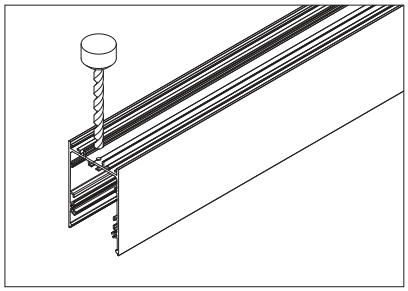

1. Drill a hole on the aluminium base

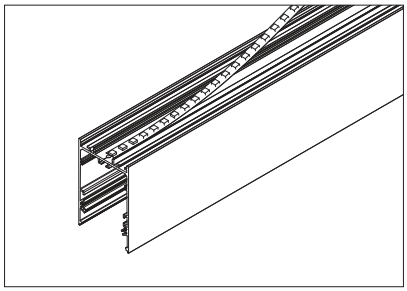

2. Apply the LED strips on to base

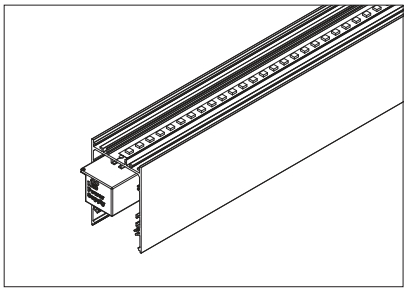

3. Secure LED driver on underside of profile cavity

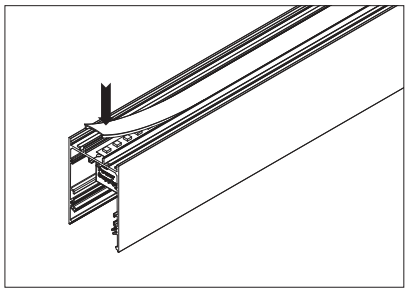

4. Attach smaller diffuser into place, working from end to end

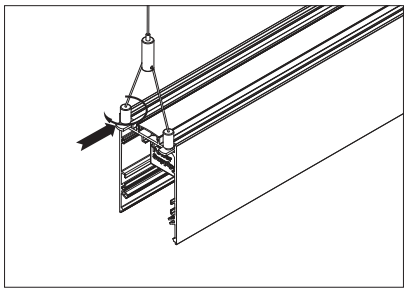

5. Slide the suspension base into the profile groove

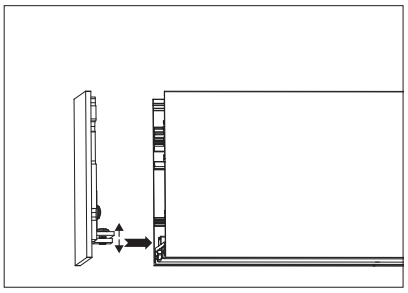

6. Align the screwless end cap into place

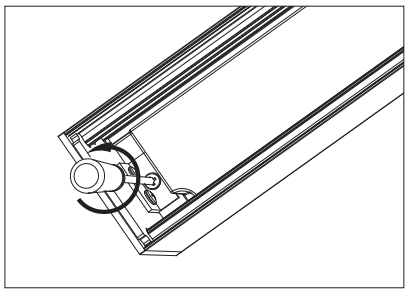

7. Secure the end cap at the L bracket base with screws

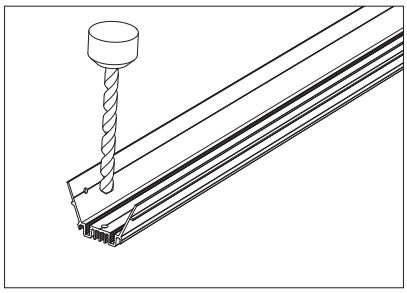

8. Drill a hole on the reflector for cable feed from LED strip

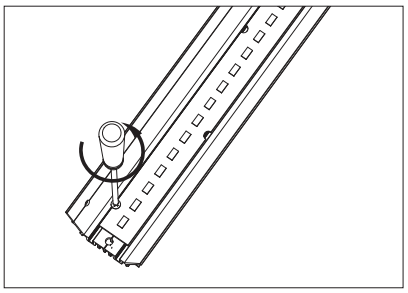

9. Fixing Rigid Led strip on reflector with suitable screws.

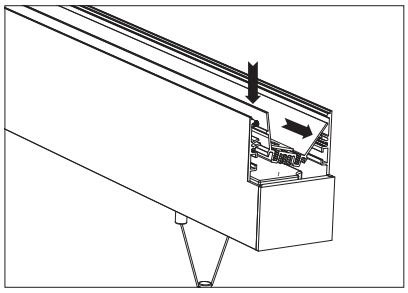

10. Ease the reflector into the profile cavity

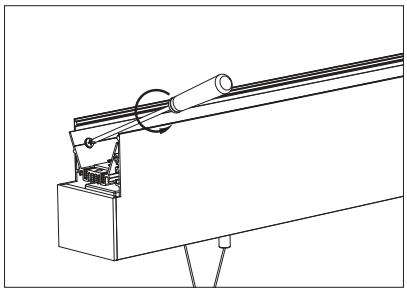

11. Secure the reflector with screws

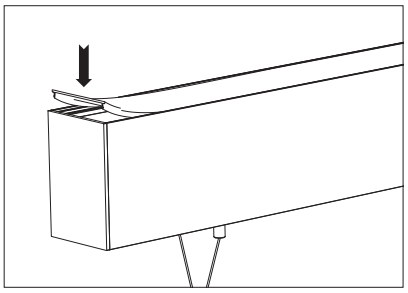

12. Attach diffuser into place, working from end to end

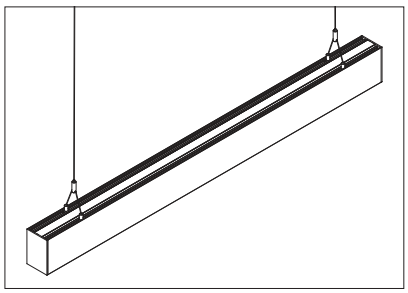

13. Installation completed.




Anmeldung